50kg Powder Mobile Trolley Unit

Protecting your world

Model	50kg
Height (mm)	~ 1050
Width (mm)	~ 440
Depth (mm)	~ 550
Weight (kg)	~ 84
Cylinder diameter (mm)	300
Operating pressure at 20°C	14 bar
Test pressure according 97/23/EC	30 bar
Burst pressure	> 55 bar
Temperature range	-30°C +60°C
Extinguishing agent	Powder
Propellant	2kg CO_2
Nominal charge	50kg
Discharge time	~ 40 sec
Jet length	~ 12m

Class of fire

Fires involving freely burning materials. For example wood, paper, textiles and carbonaceous materials.

Fires involving flammable liquids. For example petrol and spirits. NOT ALCOHOL OR COOKING OIL.

Fires involving flammable gases. For example butane and propane.

Features

- CE approval
- Complies with EN 1866
- Extremely high ratings on A, B and C class fires (solid combustibles, liquid fuels and gases)
- Can be used at low temperatures (-30°C)
- Good ergonomy, easy to operate

Technical characteristics

Mobile trolley units are designed for professional use under severe circumstances, resulting in a high level of quality and ease of use.

Ease of mobility is achieved as a result of the large wheels with solid rubber tyres and push bar also ensuring good stability during operation.

Trolley

Detachable from cylinder therefore it has no welded parts giving better safety to the unit and less corrosive points.

Headcap 4" BSP

The headcap is made of brass and equipped with a spring loaded safety valve to prevent an unsafe situation, as a result of overfilling or during accidental unscrewing from the cylinder neck gear.

Discharge device

Equipped with:

- A highly flexible 5m hose complete with a pistol
- A specially designed ergonomic patented foam nozzle ensures a steady flow of foam.

Propellant bottle

The carbon dioxide bottle, chromemolybdenum carbon steel, is made according to directive EN 1964-1 ECC.

The powder coating is resistant to scratches and knocks as well as corrosive weather conditions. It is delivered complete with a brass handwheel valve and safety valve.

Extinguishing agent

Dry powder is non-corrosive, non-abrasive, and non-toxic for humans and animals. See MSDS for more information.

Maintenance

Maintenance must be made periodically by trained and certified staff.

50kg Powder Mobile Trolley Unit

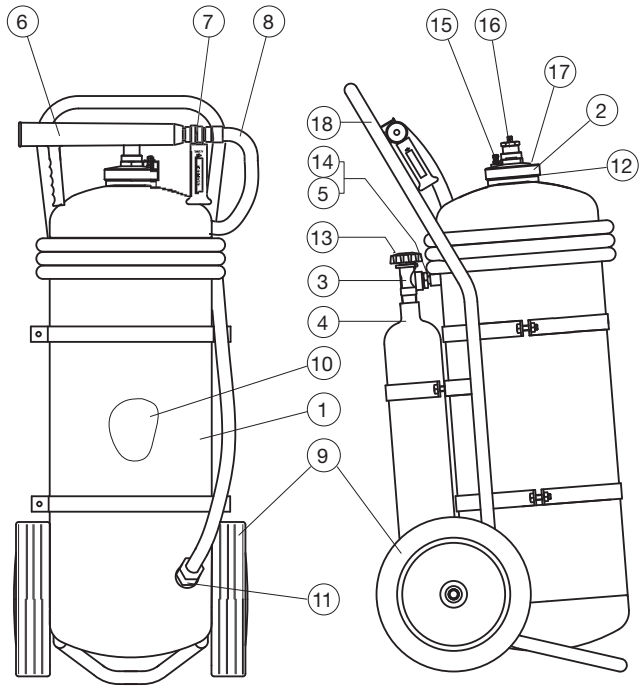

The use of non-original spare parts may cause malfunction.

No.	Description
1	Cylinder (~ lt 54) PED-CE
2	Cap G. 4”
3	Handwheel valve
4	3L CO_2 cylinder PED-CE
5	Adaptor for CO_2 cylinder
6	Plastic discharge horn
7	Turning valve brass 3/4”
8	Discharge hose L 5m
9	Ø 300mm wheels rubber and plastic
10	Powder
11	Washer ring fibre 3/4”
12	Washer black rubber 4”
13	Plastic seal
14	Washer ring fibre
15	Check valve Shraeder type
16	M30x1.5 Safety valve
17	Manometer Ø 23 1/8”
18	Trolley frame

© Chubb Fire & Security Limited 2016
This briefing is intended as general guidance and is not a substitute for detailed advice in specific circumstances. Although great care has been taken in the compilation and preparation of this edition to ensure accuracy, Chubb cannot in any circumstances accept responsibility for errors, omissions or advice given or for any losses arising from reliance upon information contained in this publication.