FireLock® V34, K11.2
Models V3411 Standard Response, V3412 Quick Response

Extended Coverage/Light Hazard (ECLH) Pendent and Recessed Pendent

V3411/V3412
Pendent

V3411/V3412
Recessed Pendent

Approvals/Listings:

c UL us LISTED FM

See Victaulic Publication 10.01 for more details.

Product Description:

These Model V34 ECLH sprinklers are designed with a larger orifice size to provide added coverage at normal light hazard operating pressures. It is cast with a hex-shaped wrench boss to allow easy tightening from many angles, reducing assembly effort. This sprinkler is available in various temperature ratings (see chart on page 4) and finishes to meet many design requirements.

Coverage

Extended spray coverage is up to 400 square feet (37.2 sq. m) per NFPA 13.

Technical Specifications:

Models: V3411, V3412

Style: Extended Coverage/ Light Hazard - Pendent, Recessed Pendent

Nominal Orifice Size: ⅝"/16 mm

K Factor: 11.2 Imp./8.1 S.I.[1]

Nominal Thread Size: ¾" NPT/20 mm

Max. Working Pressure: 175 psi/1200 kPa

Factory Hydrostatic Test: 100% @ 500 psi/3450 kPa

Min. Operating Pressure: 7 psi/48kPa

Temperature Rating: See chart

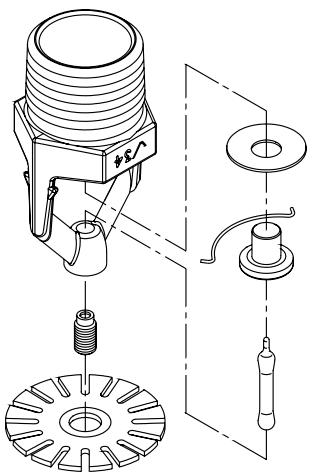

Exaggerated for clarity

Job/Owner

System No.	
Location	

Contractor

Submitted By	
Date	

Engineer

Spec Section	
Paragraph	
Approved	
Date	

 © 2014 Victaulic Company. All rights reserved.

Material Specifications:

Pendent Deflector: Bronze per UNS C51000

Bulb: Glass with glycerin solution

Bulb Nominal Diameter:

- ☐ Standard: 5.0 mm
- ☐ Quick Response: 3.0 mm

Load Screw: Bronze per UNS C65100

Pip Cap: Bronze per UNS C65100

Spring: Beryllium nickel

Seal: Teflon[2] tape

Frame: Die cast brass 65-30

Lodgement Spring: Stainless steel per UNS S30200

Accessories:

Installation Wrench

- ☐ Open End: V34
- ☐ Recessed: V34

Sprinkler Finishes:

- ☐ Plain Brass
- ☐ Chrome Plated
- ☐ White Painted[3]
- ☐ Custom Painted[3]
- ☐ Proprietary Nickel Teflon[2] coating[3]
- ☐ VC-250[4]

[1] For K-Factor when pressure is measured in Bar, multiply S.I. units by 10.0.

[2] Teflon is a registered trademakr of Dupont Co.

[3] UL Listed for corrosion resistance.

[4] UL Listed and FM Approved for corrosion resistance.

 © 2014 Victaulic Company. All rights reserved.

Approvals/Listings:

APPROVALS/LISTINGS		Model					
		V3411	V3411	V3411	V3412	V3412	V3412
Orifice Size (inches)		⅝"	⅝"	⅝"	⅝"	⅝"	⅝"
Orifice Size (mm)		16	16	16	16	16	16
Nominal K Factor Imperial		11.2	11.2	11.2	11.2	11.2	11.2
Nominal K Factor S.I.[6]		16.2	16.2	16.2	16.2	16.2	16.2
Response		Standard	Standard	Standard	Quick	Quick	Quick
Deflector Type		Pendent	Recessed Pendent Up to ½" Adjustment	Recessed Pendent Up to ¾" Adjustment	Pendent	Recessed Pendent Up to ½" Adjustment	Recessed Pendent Up to ¾" Adjustment
Room Size Feet/meters		**Approved Temperature Ratings F°/C° [5] [7]**					
16 X 16 4.9 X 4.9	cULus	A	A	A	A	A	A
	FM	B	C	-	C	D	-
	NYC/MEA 8	A	A	A	A	A	A
	CSFM 9	A	A	A	A	A	A
18 X 18 5.5 X 5.5	cULus	A	A	A	A	A	A
	FM	B	C	-	C	D	-
	NYC/MEA 8	A	A	A	A	A	A
	CSFM 9	A	A	A	A	A	A
20 X 20 6.1 X 6.1	cULus	A	A	A	A	A	A
	FM	B	C	-	C	D	-
	NYC/MEA 8	A	A	A	A	A	A
	CSFM 9	A	A	A	A	A	A

[5] Listings and approval as of printing. Not all temperature rating combinations are Approved or Listed. Check Victaulic for specific combinations.

[6] For K-Factor when pressure is measured in Bar, multiply S.I. units by 10.

[7] Light hazard only.

Notes:

Temperature Rating
A – 135°F (57°C), 155°F (68°C), 175°F (79°C), 200°F (93°C)
B – 135°F(57°C), 155°F (68°C), 175°F (79°C)
C – 135°F (57°C), 155°F (68°C)
D – 135°F (57°C)

[8] MEA #62-99-E

[9] CSFM #7690-0531:112

Dimensions:

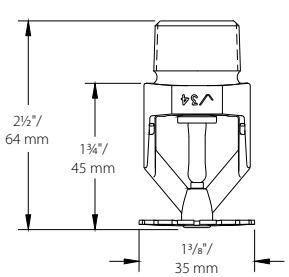

Standard Pendent –
V3411, V3412

 © 2014 Victaulic Company. All rights reserved.

Dimensions:

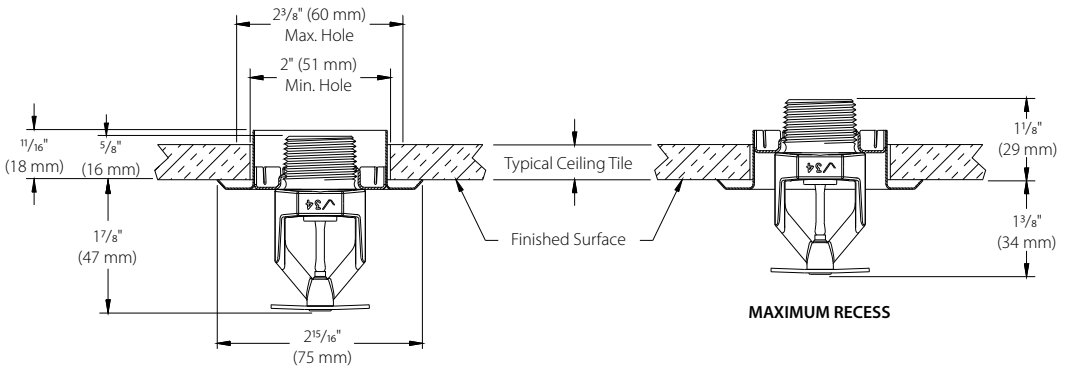

½" Adjustment Recessed –
V3411, V3412
(drawings not to scale)

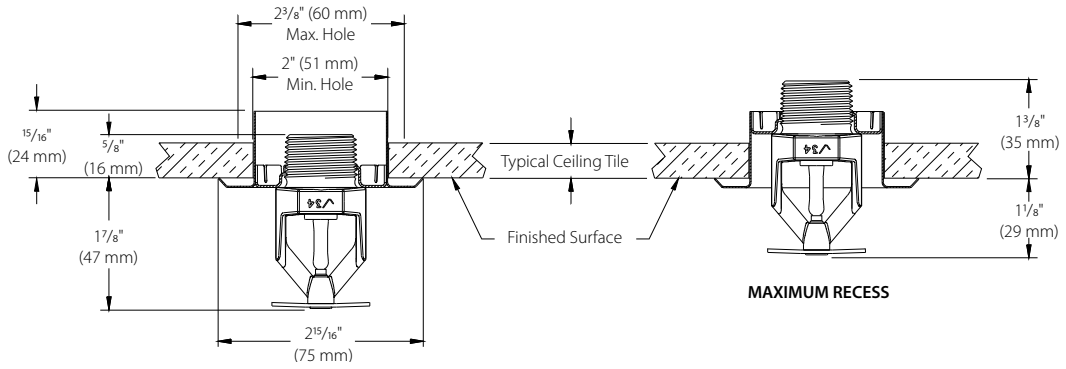

¾" Adjustment Recessed –
V3411, V3412
(drawings not to scale)

 © 2014 Victaulic Company. All rights reserved.

Room Size:

Sprinkler Performance Flow And Pressure (Minimum) V3411, V3412				
Room Size	Flow Rate GPML/LPM		End Sprinkler Pressure PSI/kPa	
Ft. x Ft. m x m	FM	UL	FM	UL
16 X 16 4.9 X 4.9	30 115	30 115	7 50	7 50
18 X 18 5.5 X 5.5	33 125	33 125	9 60	9 60
20 X 20 6.1 X 6.1	40 150	40 150	13 90	13 90

Distribution Patterns:

Models V3411, V3412
K11.2 ECLH Pendent and Recessed Pendent
Distribution Patterns – Trajectory

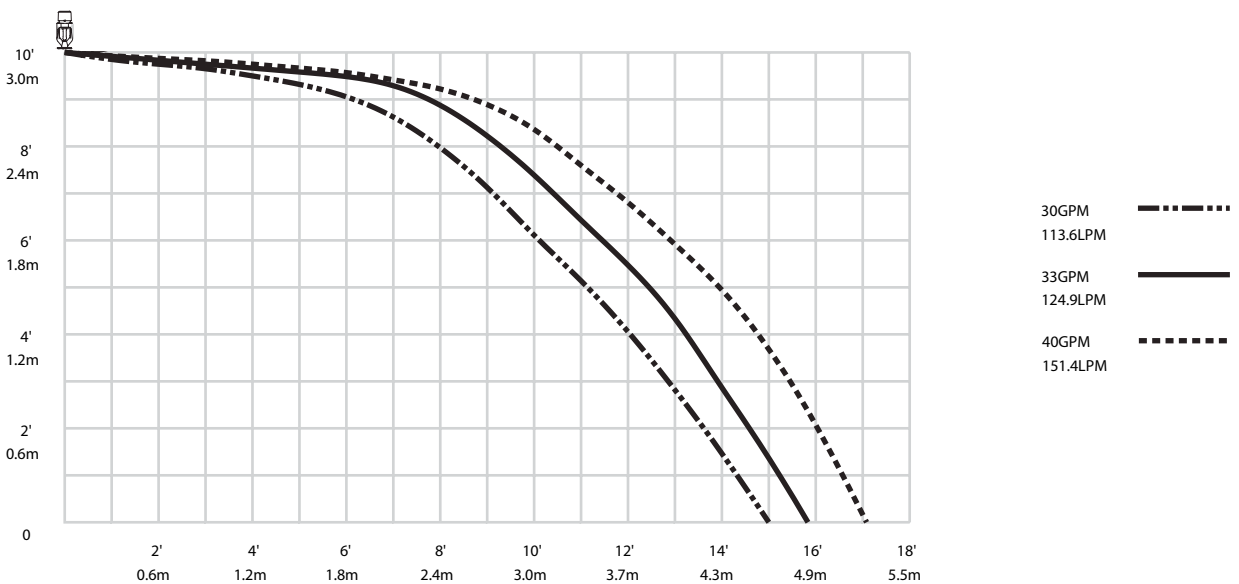

Response	Miniumum Installation Spacing Feet/meters
V3411 - Standard	10.0 3.0
V3412 - Quick	8.0 2.4

NOTES:

A. Data shown is approximate and can vary due to differences in installation.

B. These graphs illustrate approximate trajectories, floor-wetting, and wall-wetting patterns for these specific Victaulic FireLock Automatic Sprinklers. They are provided as information for guidance in avoiding obstructions to sprinklers and should not be used as minimum sprinkler spacing rules for installation. Refer to the appropriate NFPA National Fire Code or the Authority Having Jurisdiction for specific information regarding obstructions, spacing limitations and area of coverage requirements. Failure to follow these guidelines could adversely affect the performance of the sprinkler and will void all Listings, Approvals and Warranties.

C. All patterns are symmetrical to the centerline of the waterway.

 © 2014 Victaulic Company. All rights reserved.

Ratings:

All glass bulbs are rated for temperatures from -65°F (-54°C) up to those shown in adjacent table.

Sprinkler Temperature Classification	Victaulic Part Identification	Temperature – °F/°C		Glass Bulb Color
		Nominal Temperature Rating	Maximum Ambient Temperature Allowed	
Ordinary	A	135°F/57°C	100°F/38°C	Orange
Ordinary	C	155°F/68°C	100°F/38°C	Red
Intermediate	E	175°F/79°C	150°F/65°C	Yellow
Intermediate	F	200°F/93°C	150°F/65°C	Green

Available Wrenches:

	Open End	Recessed
Pendent	V34	V34
Recessed Pendent	–	V34

⚠ WARNING

- **Always read and understand installation, care, and maintenance instructions, supplied with each box of sprinklers, before proceeding with installation of any sprinklers.**
- **Always wear safety glasses and foot protection.**
- **Depressurize and drain the piping system before attempting to install, remove, or adjust any Victaulic piping products.**
- **Installation rules, especially those governing obstruction, must be strictly followed.**
- **Painting, plating, or any re-coating of sprinklers (other than that supplied by Victaulic) is not allowed.**

Failure to follow these instructions could result in serious personal injury and/or property damage.

The owner is responsible for maintaining the fire protection system and devices in proper operating condition. For minimum maintenance and inspection requirements, refer to the current National Fire Protection Association pamphlet that describes care and maintenance of sprinkler systems. In addition, the authority having jurisdiction may have additional maintenance, testing, and inspection requirements that must be followed.

If you need additional copies of this publication, or if you have any questions about the safe installation of this product, contact Victaulic World Headquarters: P.O. Box 31, Easton, Pennsylvania 18044-0031 USA, Telephone: 001-610-559-3300.

Installation
Reference should always be made to the I-40 Victaulic FireLock Automatic Sprinklers Installation and Maintenance Sheet for the product you are installing. This installation sheet is included with each shipment of Victaulic products for complete installation and assembly data, and is available in PDF format on our website at victaulic.com.

Warranty
Refer to the Warranty section of the current Price List or contact Victaulic for details.

Note
This product shall be manufactured by Victaulic or to Victaulic specifications. All products to be installed in accordance with current Victaulic installation/assembly instructions. Victaulic reserves the right to change product specifications, designs and standard equipment without notice and without incurring obligations.

Trademarks
Victaulic is a registered trademark of Victaulic Company.

 © 2014 Victaulic Company. All rights reserved.